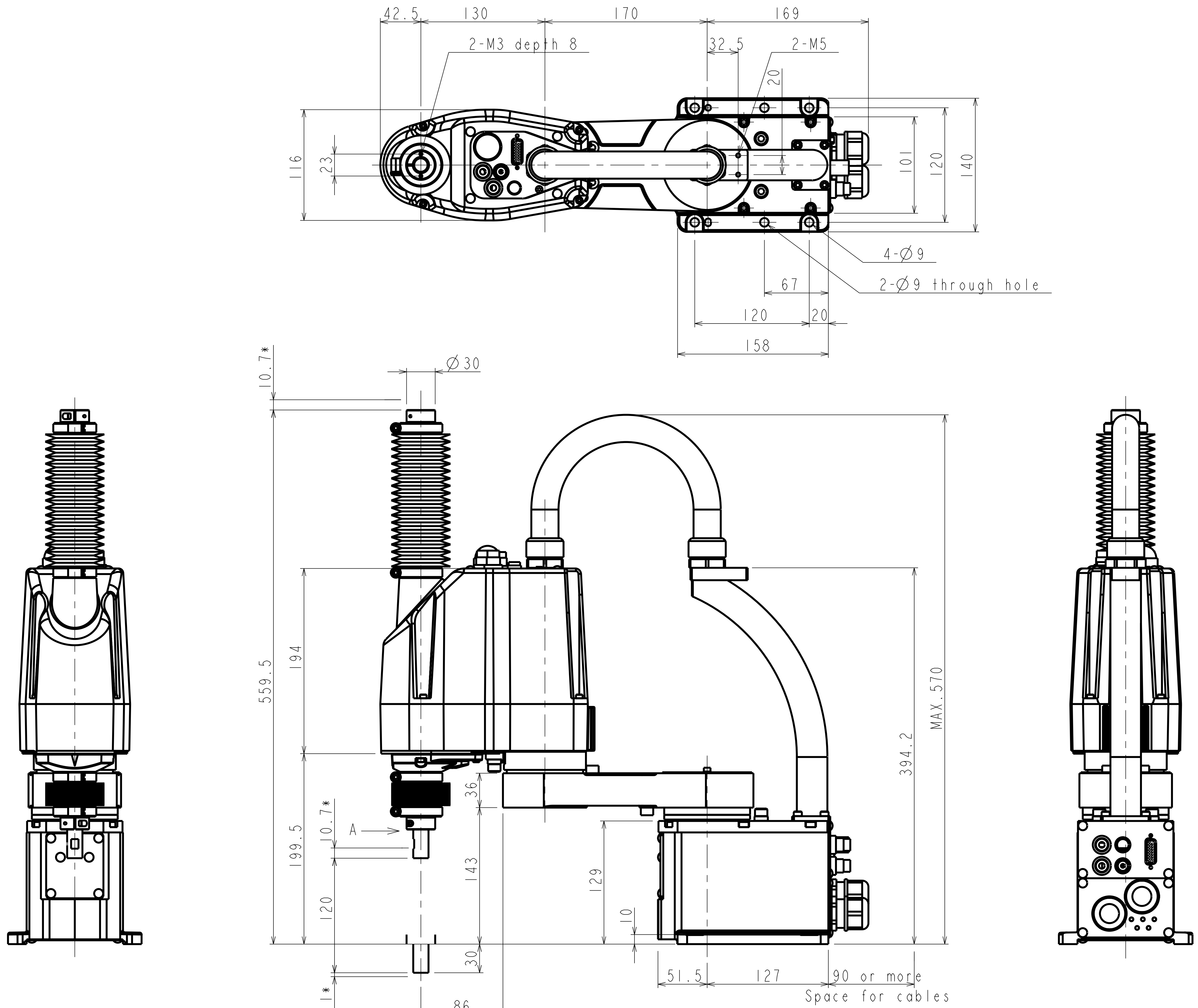

(*) indicates the stroke margin by mechanical stop.

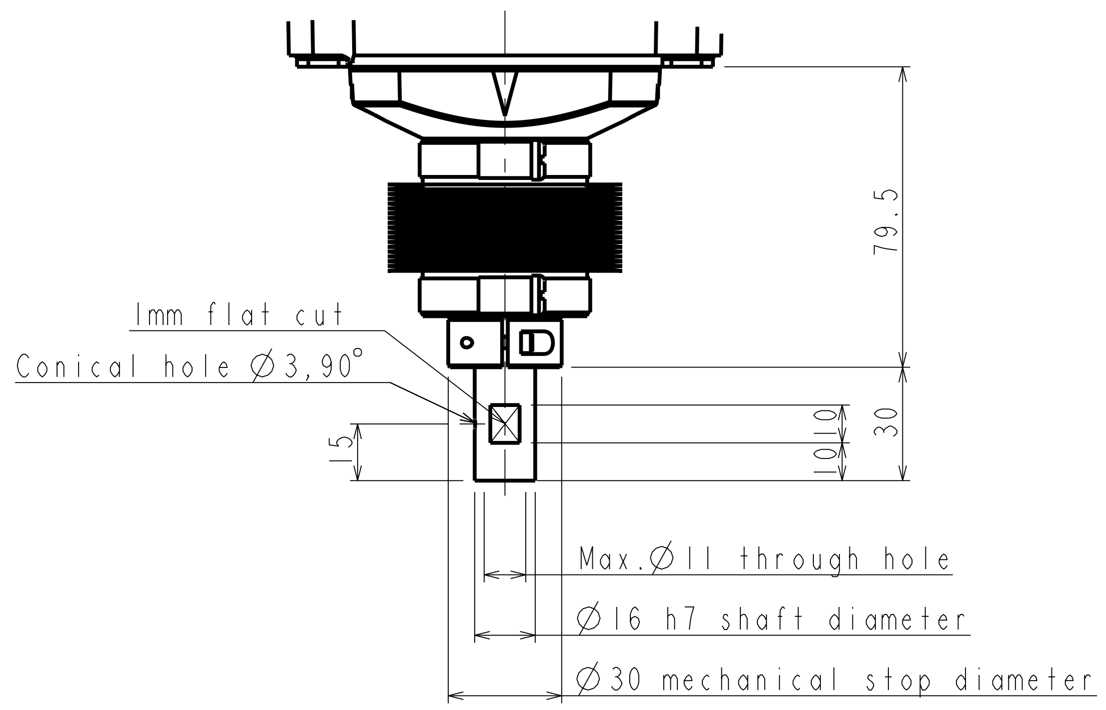

scale 1:2

Detail of "A"
(Calibration point position of joints #3 and #4)

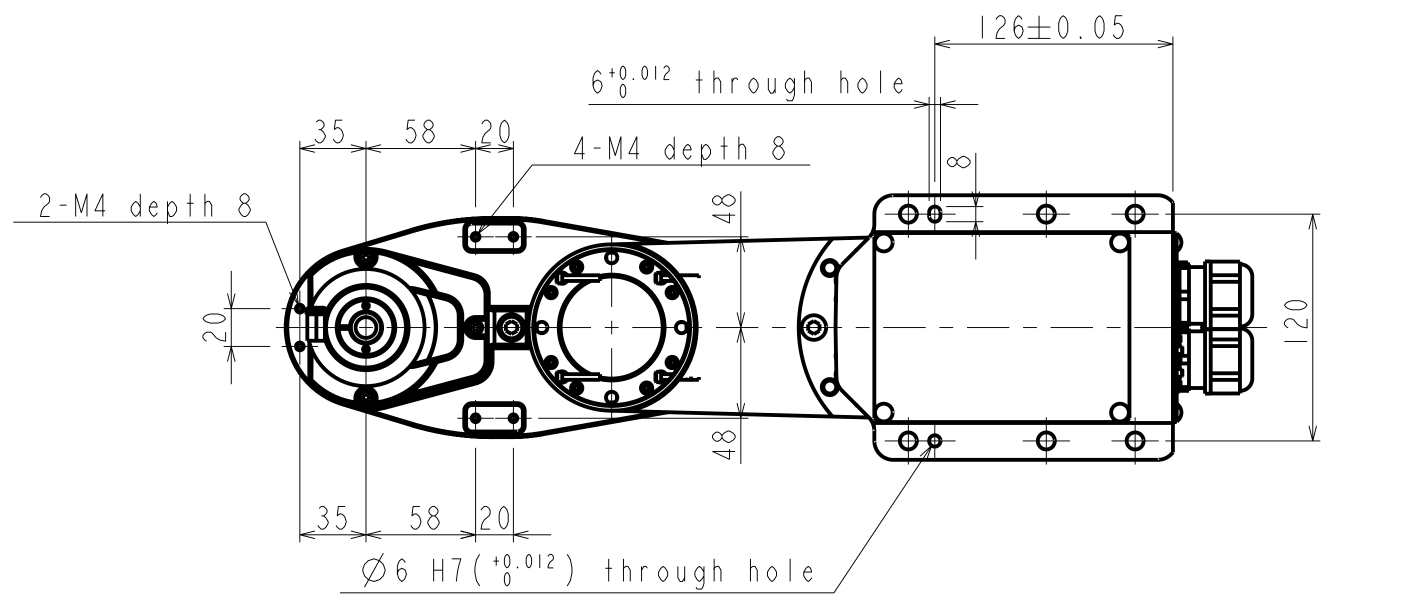

SEIKO EPSON CORP.

TITLE
G3-301C External dimentions

DRW.No.
G3-301C

REV_No.
00