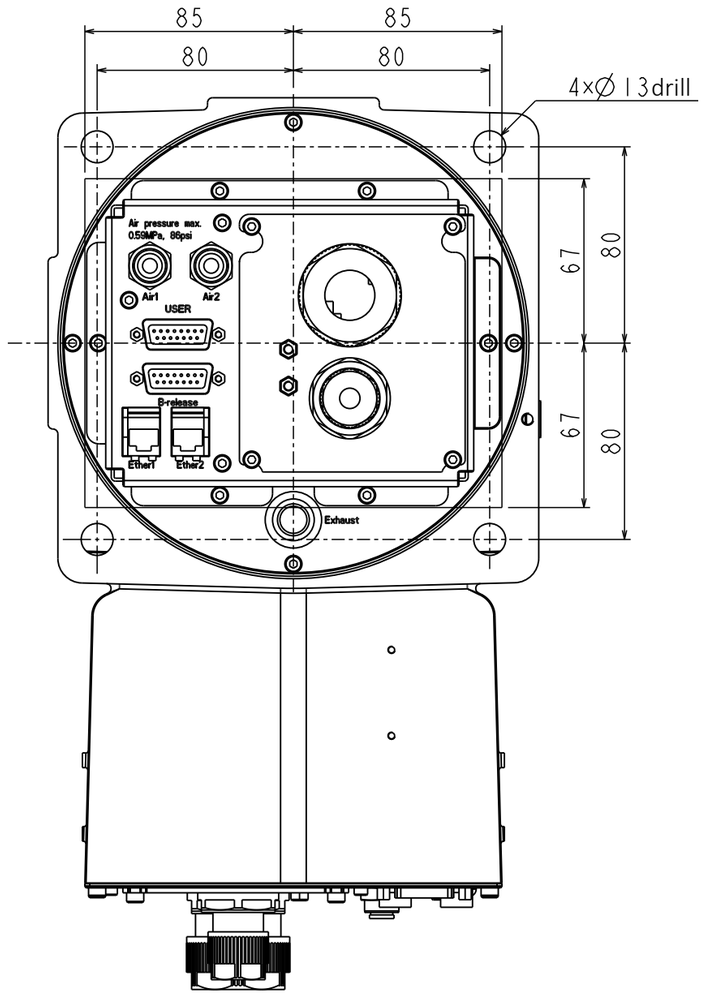
85
85
80
80
4×∅13drill
67
80
67
80
Air pressure max.
0.59MPa, 86psi
Air1
Air2
USER
B-release
Ether1
Ether2
Exhaust