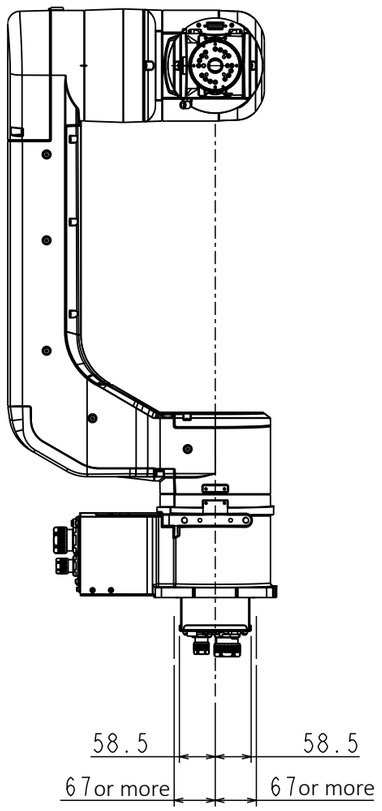
58.5
58.5
67or more
67or more

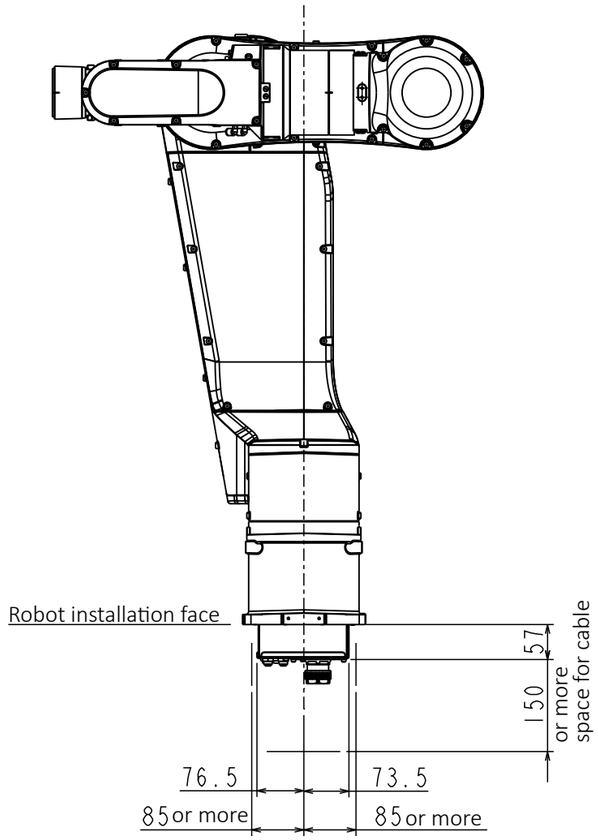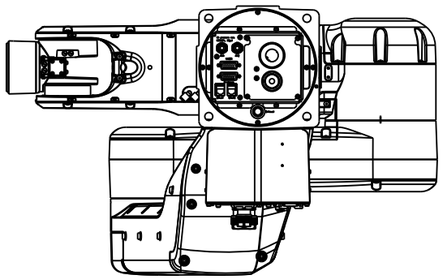
Robot installation face
57
150
or more
space for cable
76.5
73.5
85or more
85or more