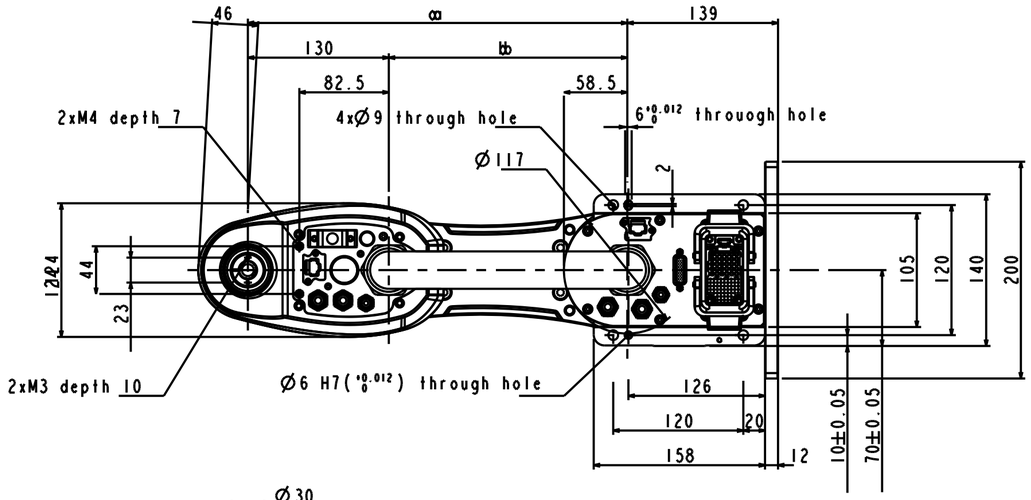

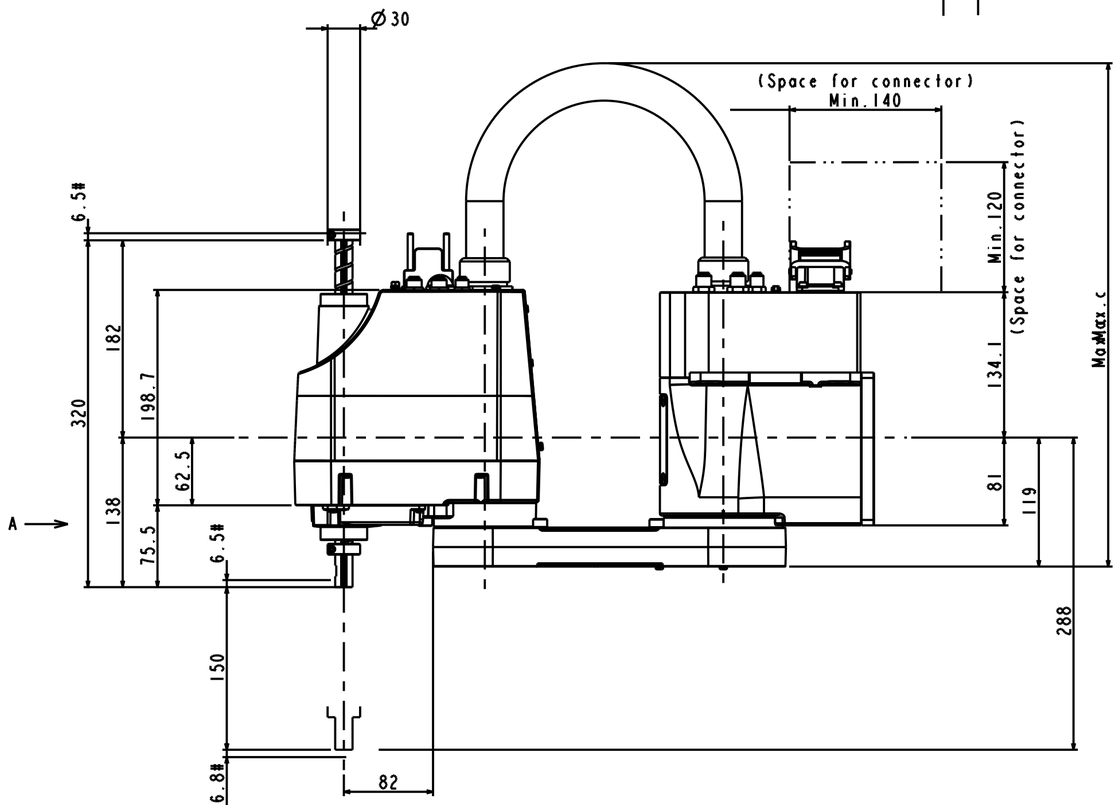

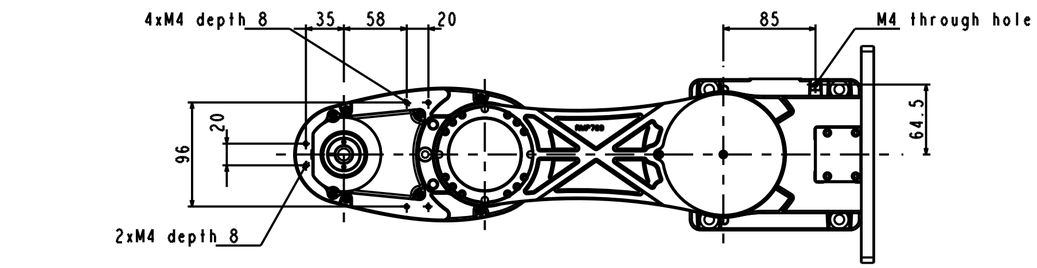

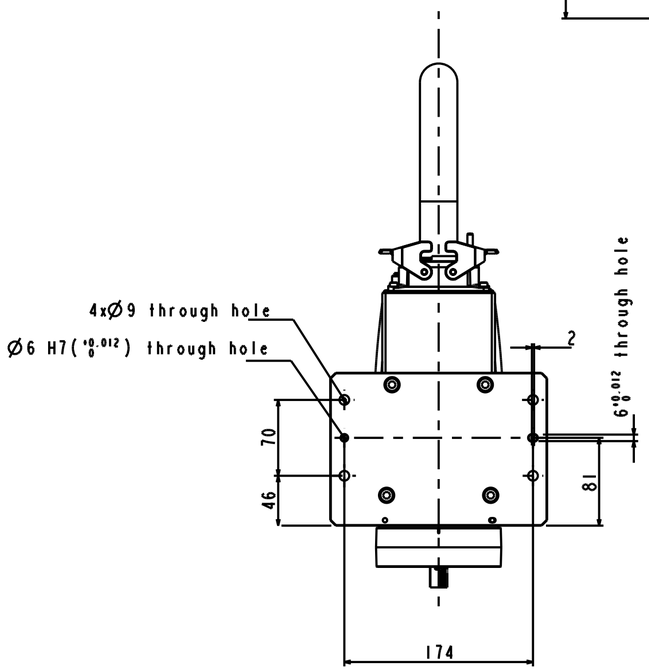

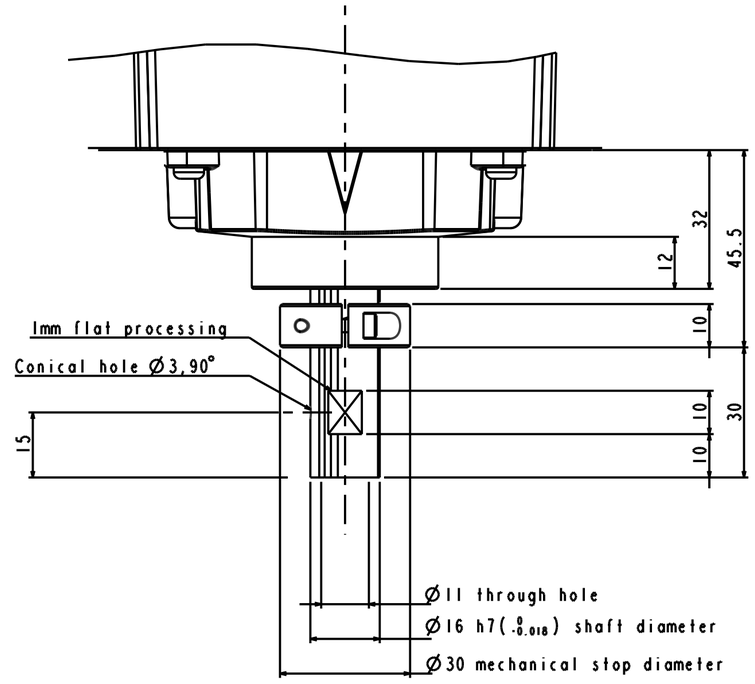

View A
(Position of origin of joint 3 and 4.)
Scale 1:1

Model	GX4-A301SM	GX4-A351SM
a (Arm length)	300	350
b (Arml length)	170	220
c (Overall height)	475	500