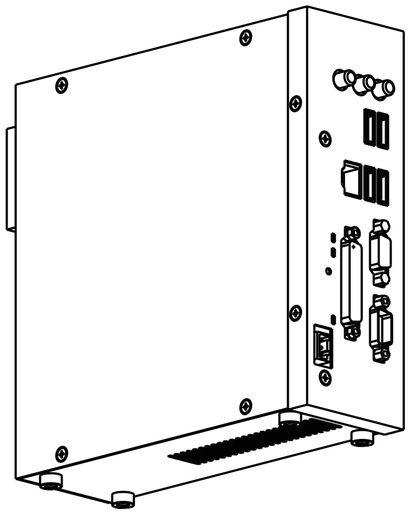

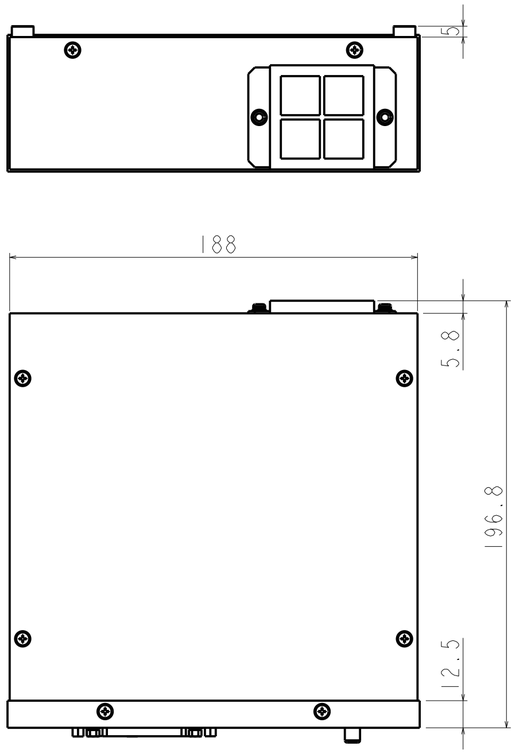

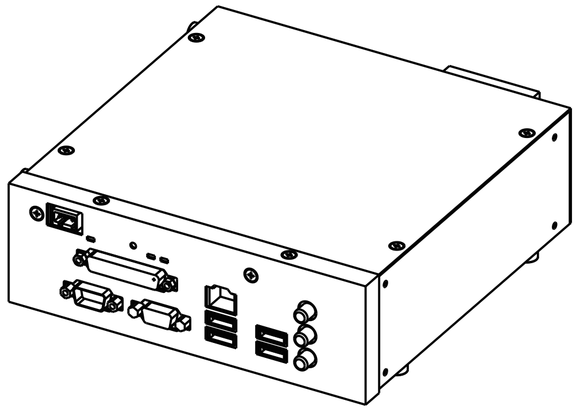

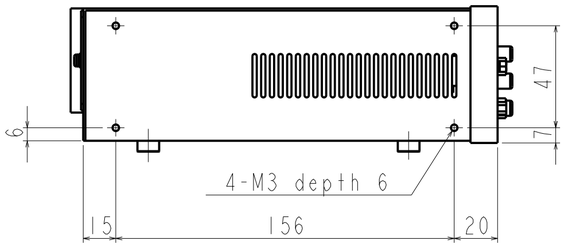

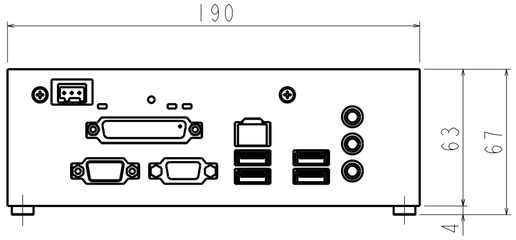

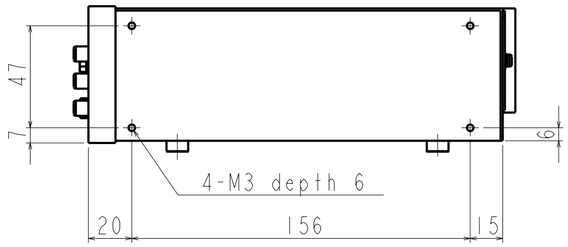

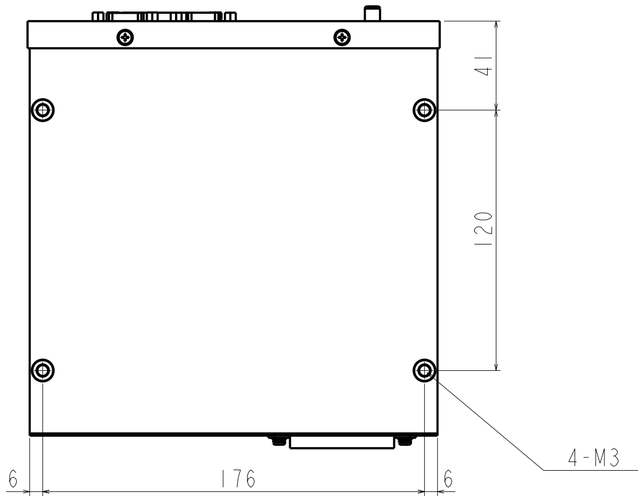

				TITLE CVI(BOX) External dimensions	
SEIKO EPSON CORP.			DRW.No. CVI BOX		