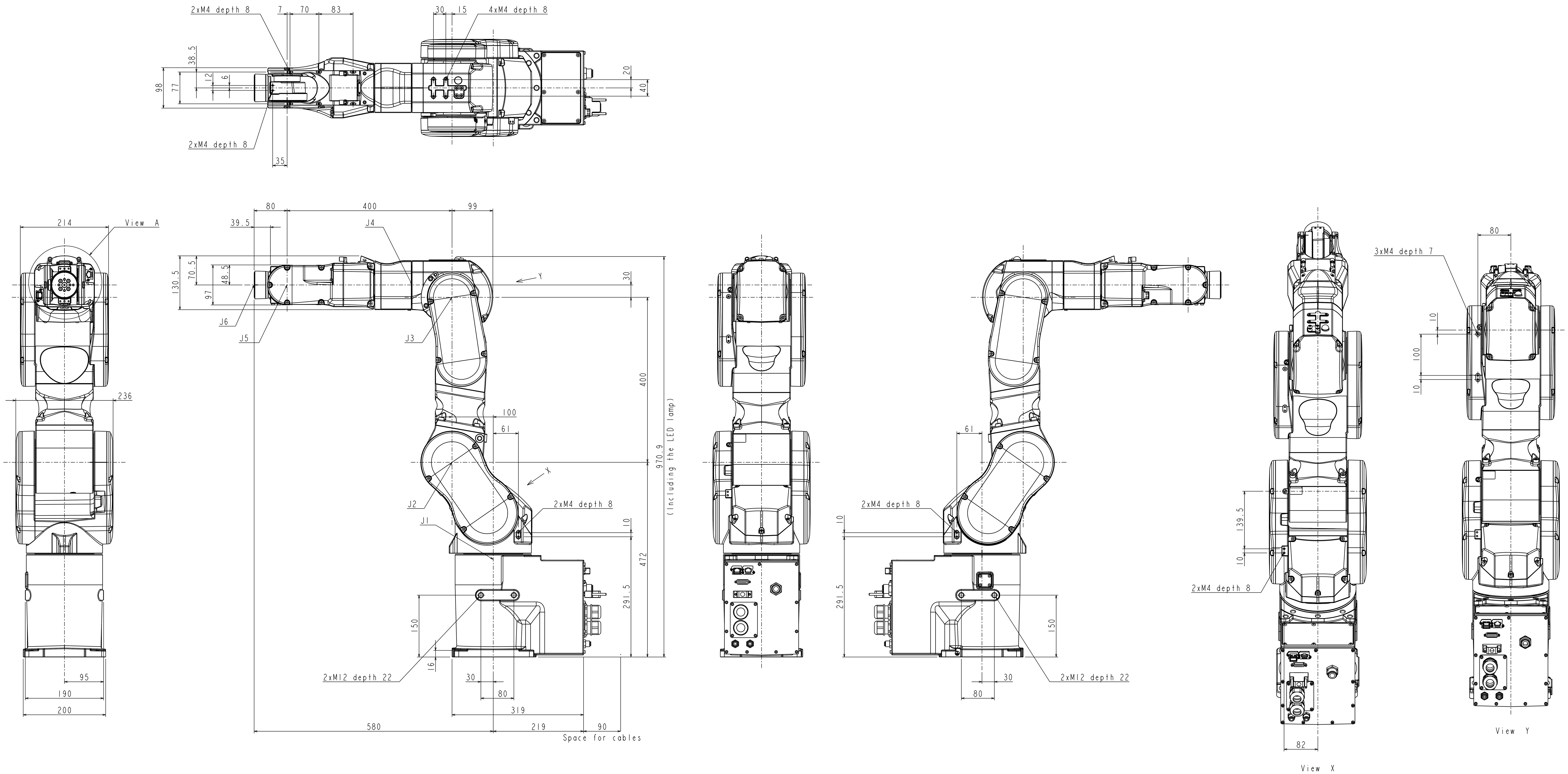

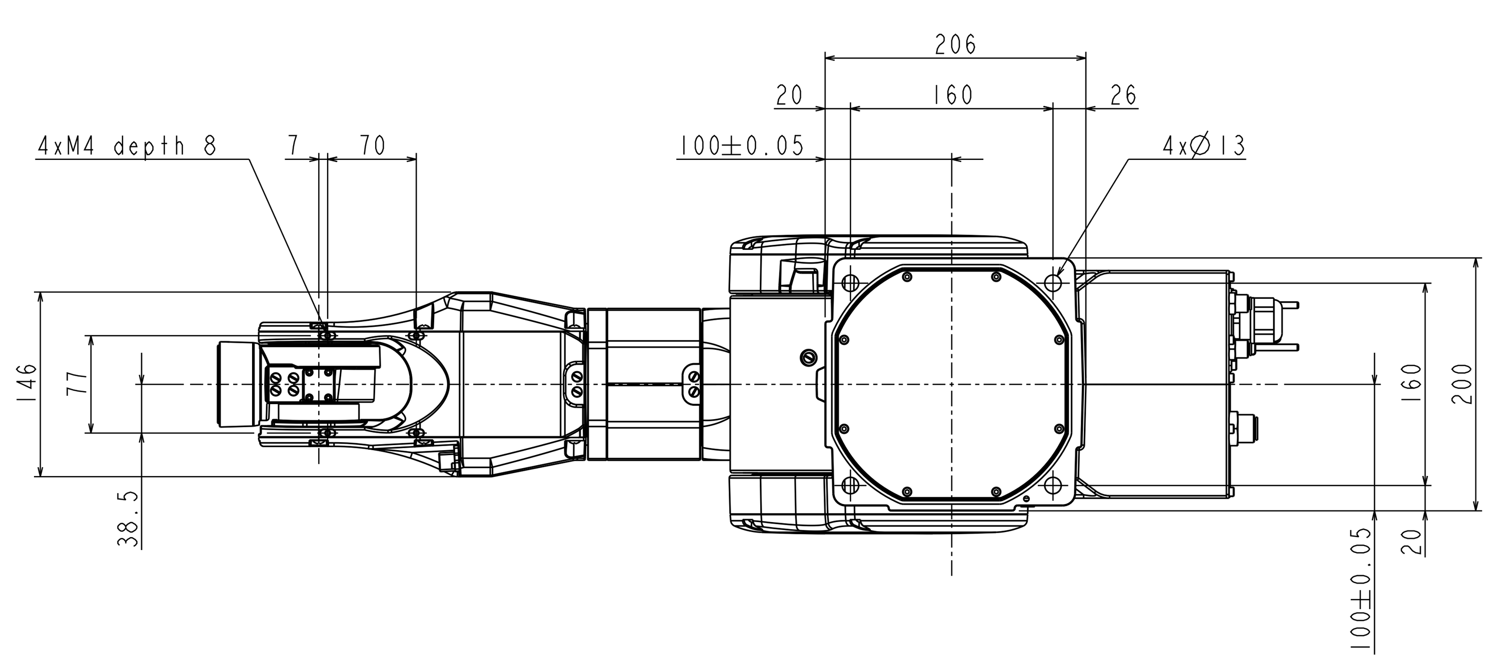

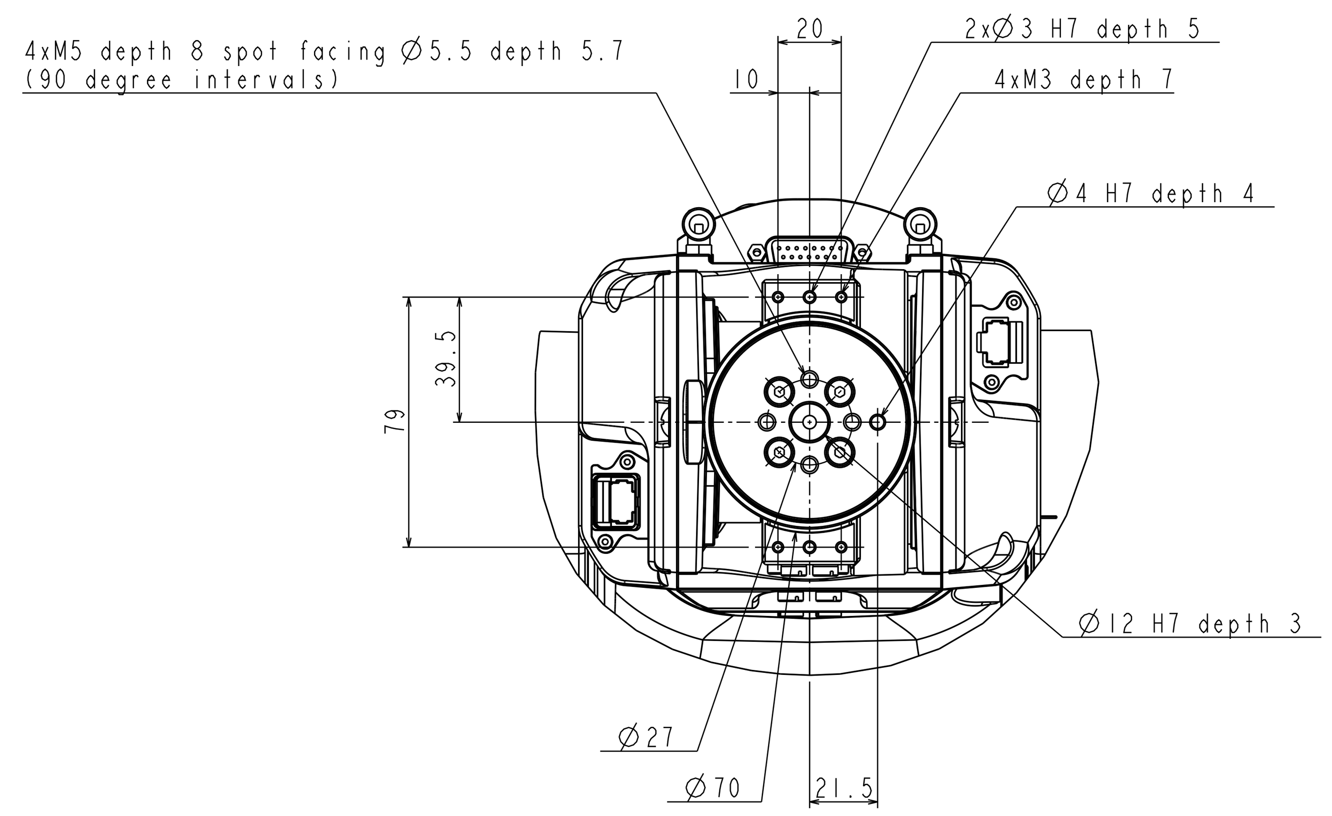

View A detail
scale 1:2

TITLE
R64-A901C Outline

DRW.No.
C8L-A901C_CLN_REAR

REV_No.
00

SEIKO EPSON CORP.