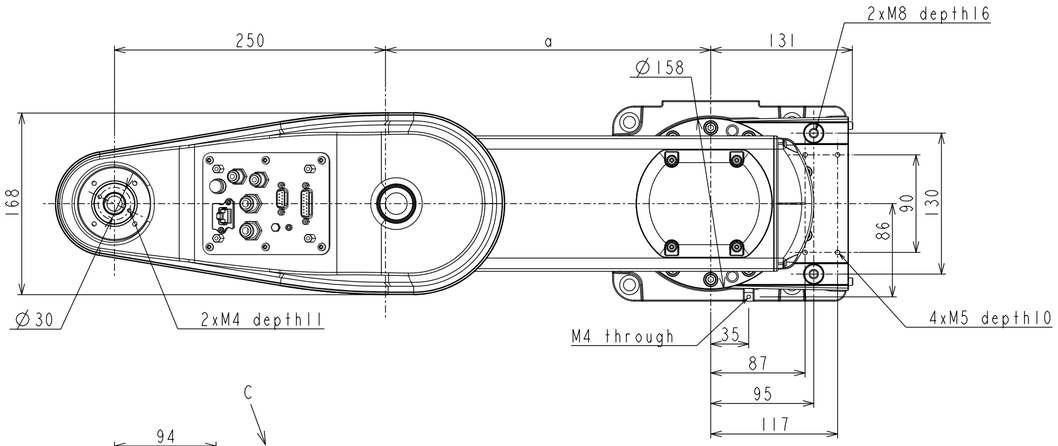

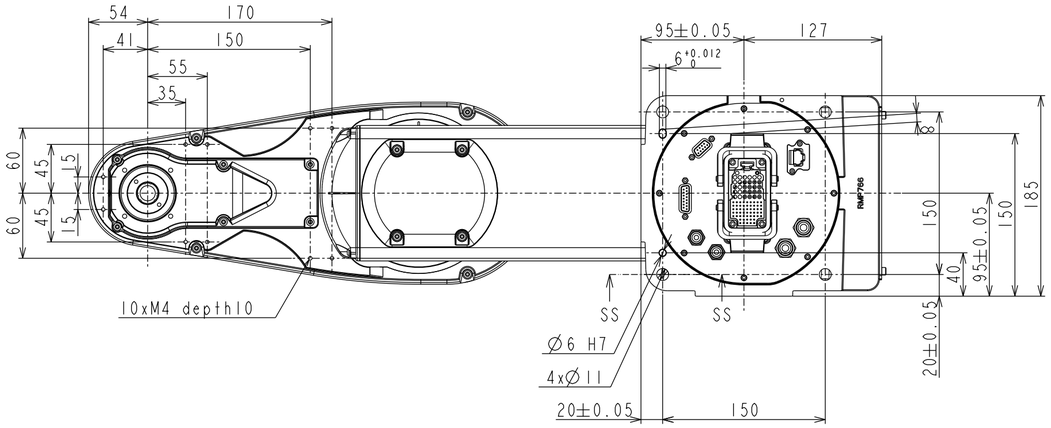

View B

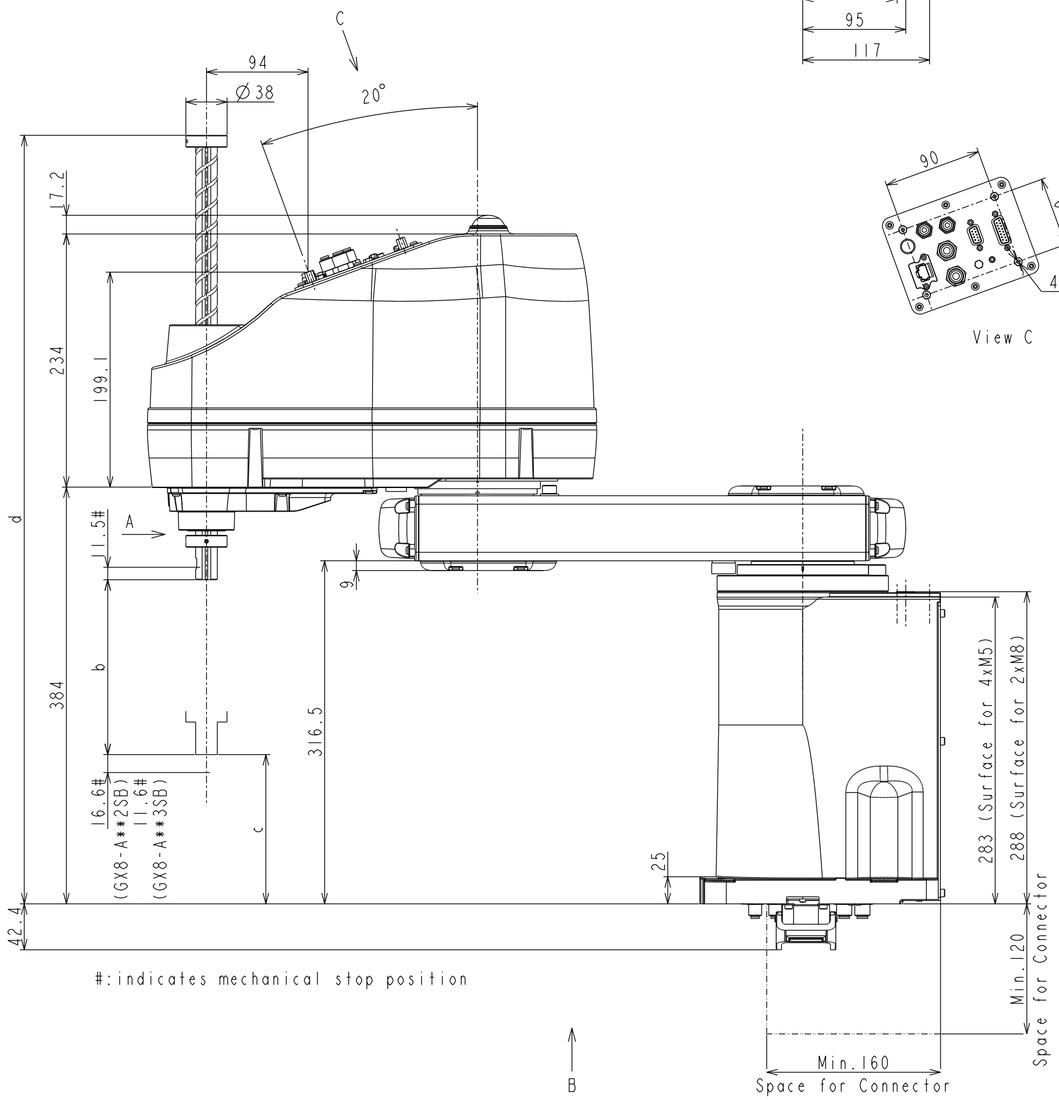

#:indicates mechanical stop position

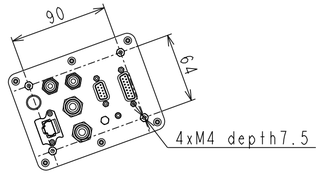

View C

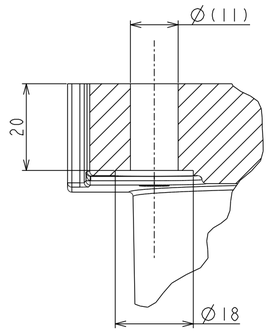

Section SS-SS
Scale 1:1
(4 places)

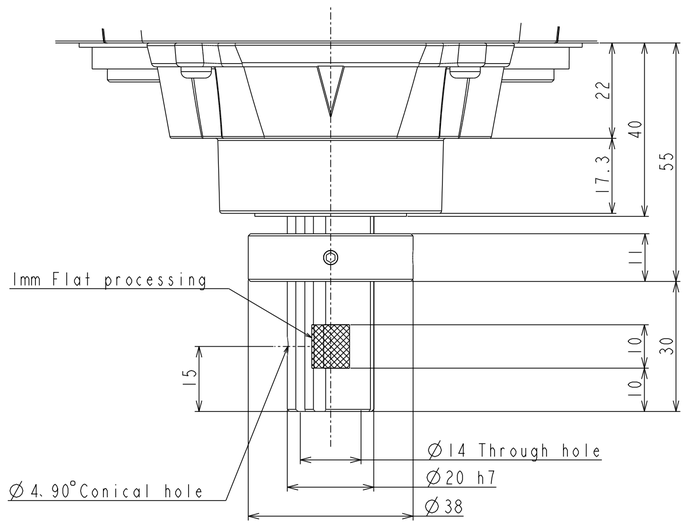

Detail of View A
(Position of origin of joint 3 and 4.)
Scale 1:1

	GX8-A452SB	GX8-A453SB	GX8-A552SB	GX8-A553SB	GX8-A652SB	GX8-A653SB
a	200	200	300	300	400	400
b	200	330	200	330	200	330
c	99	-31	99	-31	99	-31
d	709	834	709	834	709	834

EPSON